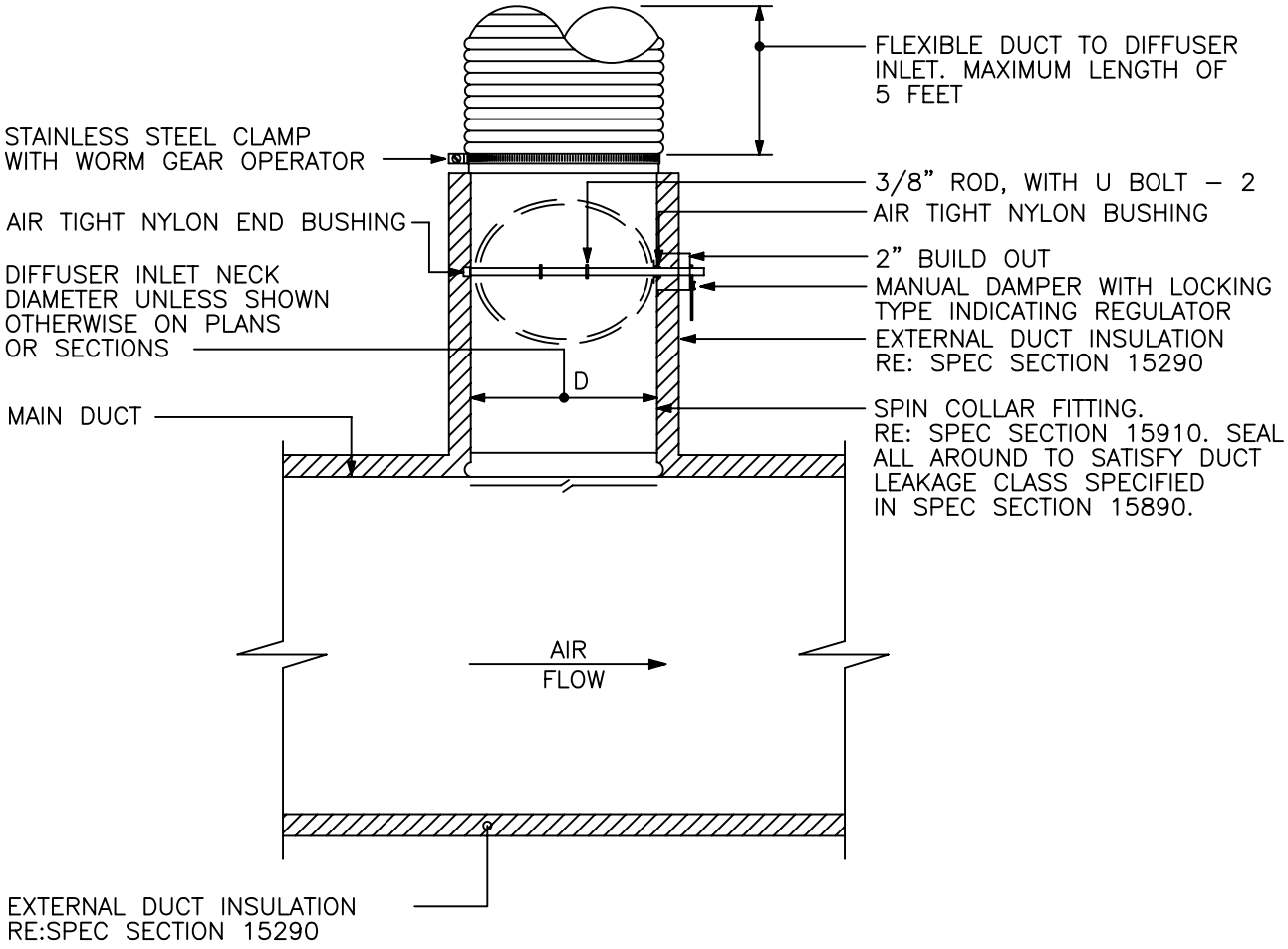

NOTES:

1. USE THIS DETAIL FOR EXTERNALLY INSULATED DUCTWORK.
2. EXTEND ROUND SHEETMETAL DUCTWORK AND ASSOCIATED DUCT INSULATION FROM MAIN DUCT, SO FLEXIBLE DUCT LENGTH DOES NOT EXCEED 5 FEET.
3. FLEX DUCT: FLEXMASTER TYPE 8M–R6, OR APPROVED EQUAL – SUBMIT SAMPLE FOR APPROVED EQUAL.

SPIN COLLAR FITTING W/ DAMPER (FLD - B03)

NOT TO SCALE